Acrel

Industrial insulation monitoring device

- Insulation monitoring and fault location of IT systems
- Used in AC single and three-phase IT and DC ungrounded systems
- Monitoring system voltage of 690V AC and DC, 800V DC
- Equipment fault, insulation warning and alarm function
- Locate the insulation fault and indicate it through the indicator light
- With RS485 communication, CAN communication

Parameters

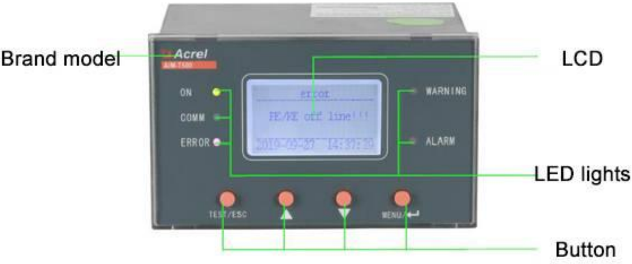
Brand model
LCD
LED lights
Button
Acrel
ON
COMM
ERROR
WARNING
ALARM
error
PE/PE off line!!!
TEST/ESC
MENU/

Voltage	0-690V AC,0-800V DC
Frequency	40-60Hz
Measure range	1kΩ-10MΩ
Measure current	＜270uA
Relay output	Error, early warning, alarm
Auxiliary power	AC85～265V 功耗＜8W
Communication	RS485,Modbus-RTU

Model

1）AIM-T300 insulation monitor

- Can monitor AC, DC or AC below 480V DC mixed ungrounded system
- With fault warning and alarm function
- 1 channel RS485
- 2 relay outputs
- Self-check function
- SOE event record

Acrel
ALARM

2) AIM-T500 insulation monitor

- Can monitor AC and AC/DC under 690V Mixed ungrounded system
- With fault warning and alarm function
- 1 channel RS485
- 2 relay outputs
- Self-check function
- SOE event record

3) AIM-T500L insulation monitor

- Can monitor AC and AC/DC under 690V Mixed ungrounded system
- DC ungrounded system under 800V to ground Resistance and capacitance value
- With fault warning and alarm function
- 1 channel RS485
- 2 relay outputs
- Fault location function
- 1 CAN communication
- Self-check function
- SOE event record

4) ACPD100 coupling instrument

- Used with AIM-T500 insulation monitor
- Can monitor single-phase AC 0-1150V, DC Insulation resistance of 0-1760V ungrounded system

5) ACPD200 coupling instrument

- Used with AIM-T500 insulation monitor
- Can monitor AC three-phase 0-1650V, or AC System with DC components (such as rectifier) 0-1300V Insulation resistance of ungrounded systems

6) ASG200 test signal generator

- Using CAN bus
- Data exchange with other equipment
- When an insulation failure occurs in the IT system, Can start in time and generate test signals

7) AIL200-12 insulation fault locator

- Using CAN bus
- Data exchange with other equipment
- Match with AKH-0.66L series current transformer
- Detect the signal injected into the system by the ASG200 test signal generator, so as to accurately locate the circuit where the insulation fault is located

Dimension

AIM-T300

Aperture 88*88mm

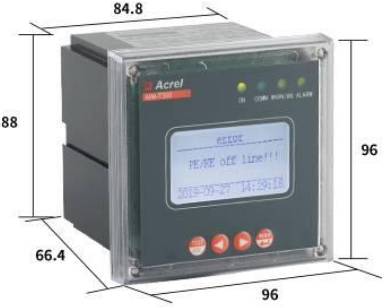
84.8
88
66.4
96
96
Acrel
AIM-T300
ON
COMM
error
PE/KE off line!!!

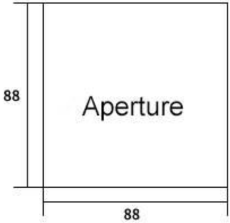
88
Aperture
88

AIM-T500/500L

Aperture126*74mm

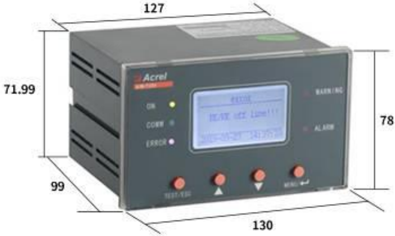
127
71.99
99
130
78
Acrel
ON
COMM
ERROR
WARNING
ALARM
error
PE/KE off line!!!
TEST/ESC
MENU

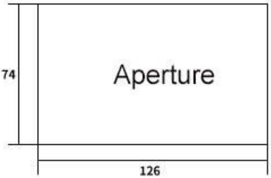
74
Aperture
126

ACPD100/200

35mm rail installation

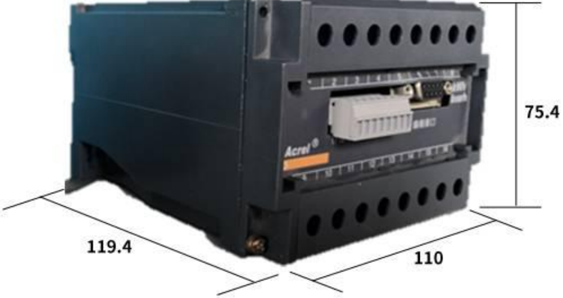
Acrel
75.4
119.4
110

ASG200

35mm rail installation

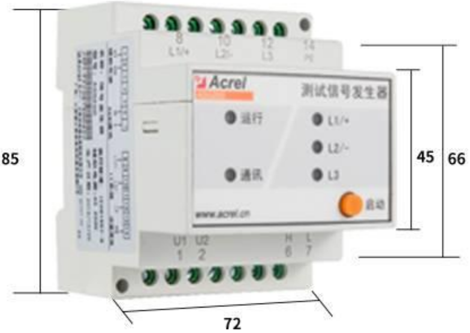
8
L1/+
10
L2/-
12
L3
14
H
Acrel
测试信号发生器
运行
通讯
L1/+
L2/-
L3
启动
www.acrel.cn
U1 U2
1 2
H L
6 7
85
45
66
72

AIL200-12

35mm rail installation

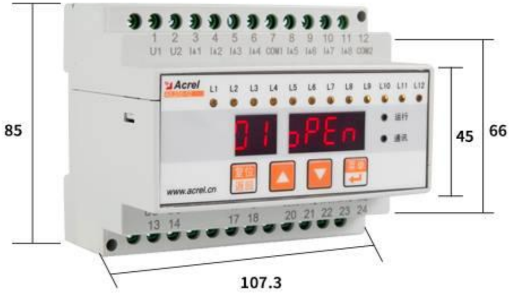
1 2 3 4 5 6 7 8 9 10 11 12
U1 U2 IΔ1 IΔ2 IΔ3 IΔ4 COM1 IΔ5 IΔ6 IΔ7 IΔ8 COM2
Acrel
L1 L2 L3 L4 L5 L6 L7 L8 L9 L10 L11 L12
01 oPEn
运行
通讯
www.acrel.cn
13 14 17 18 20 21 22 23 24
85
45
66
107.3

Wiring

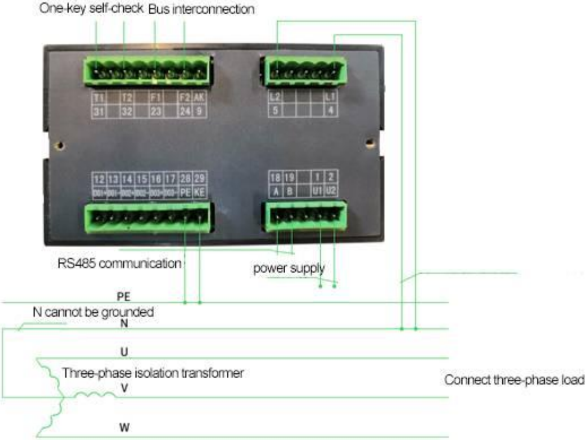
One-key self-check
Bus interconnection
T1 T2 F1 F2 AK
31 32 23 24 9
L2 L1
5 4
12 13 14 15 16 17 28 29
PE KE
18 19 1 2
A B U1 U2
RS485 communication
power supply
PE
N cannot be grounded
N
U
Three-phase isolation transformer
V
W
Connect three-phase load

AIM-T500 insulation monitor applied in three-phase IT system

One-key self-check Bus interconnection

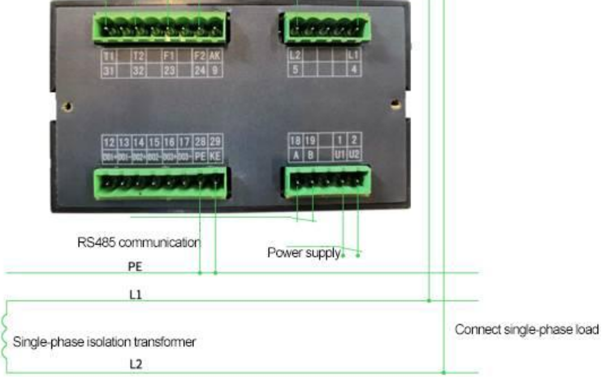
T1
T2
F1
F2
AK
31
32
23
24
9
L2
L1
5
4
12
13
14
15
16
17
28
29
DO1+
DO1-
DO2+
DO2-
DO3+
DO3-
PE
KE
18
19
1
2
A
B
U1
U2
RS485 communication
Power supply
PE
L1
Single-phase isolation transformer
L2
Connect single-phase load

AIM-T500 insulation monitor applied in single-phase IT system

Installation diagram

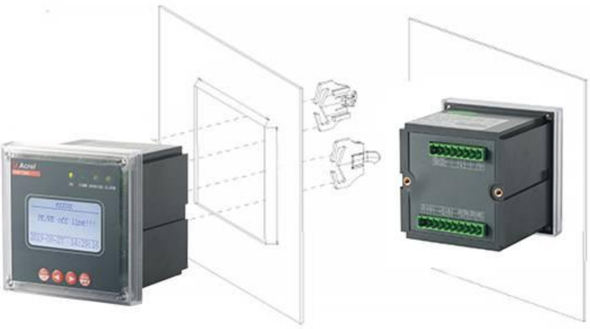

Installation steps:

The installation method is screen-mounted, which is fixed by squeezing with buckles on both sides.

The specific operation is as follows:

1. On the switchboard, choose a suitable place to open a mounting hole with the same size as the opening of the installed instrument
2. Insert the meter into the meter hole of the switchboard, after inserting the meter, fix it with the buckle.

Application field

Data centre

Petrochemical

Ferrous Metallurgy

Mine

Transportation

Port

Field Application

Certificate

TÜV AUSTRIA CERT GMBH
Certification Body

TÜV AUSTRIA

CERTIFICATE OF CONFORMITY

FAQ

1

Insulation monitor LCD display: PE/KE disconnection fault,
Or the error indicator lights up

Whether the 28 and 29 terminals of AIM-T300 are reliably connected to the equipotential terminal block, check the wiring and ensure that it is reliably connected.

2

Insulation monitor meter does not light up

Check whether the auxiliary power input wiring is normal and whether the voltage between the two terminals is within the allowable input range.

3

The indicator lights of the test signal generator L1, L2 or L3 are on

The corresponding phase line may have a ground fault, It can be checked with the positioning results.

4

The test signal generator cannot communicate

Check whether the communication line is reliably connected and whether the line sequence is reversed.

5

Insulation fault locator communication is abnormal or no communication

Check whether the communication line is reliably connected
and whether the line sequence is reversed.
If the wiring is normal, check whether the communication
address setting of the instrument is correct.

6

An indicator light in the insulation fault locator L1-L12 is on

The corresponding circuit has an insulation fault to the ground,
and it needs to be powered off for troubleshooting.

About Acrel

ACREL CO., Ltd. was founded in 2003 and successfully listed on GEM in 2012. ACREL is a high-tech enterprise that integrats R&D, production, sales and service. since its establishment, it committed to provide users with energy efficiency management and power security system solutions. Acrel Electric has a complete production line from cloud platform software to sensors. At present, more than 10,000 sets of various solutions are running all over the country.

Production workshop